ITEM NO.	PART NUMBER	DESCRIPTION	QTY.
1	BPRD	Base	1
2	WASP	NECK	1
3	CRRD-34	RING	1
4	BL3T-1	LOWER BALL	1
5	TU12-.75"	NECK TUBE	1
6	BL1T-34	End Ball	1
7	HKVT	U-PIPE	1
8	HROVT	PLATE	1

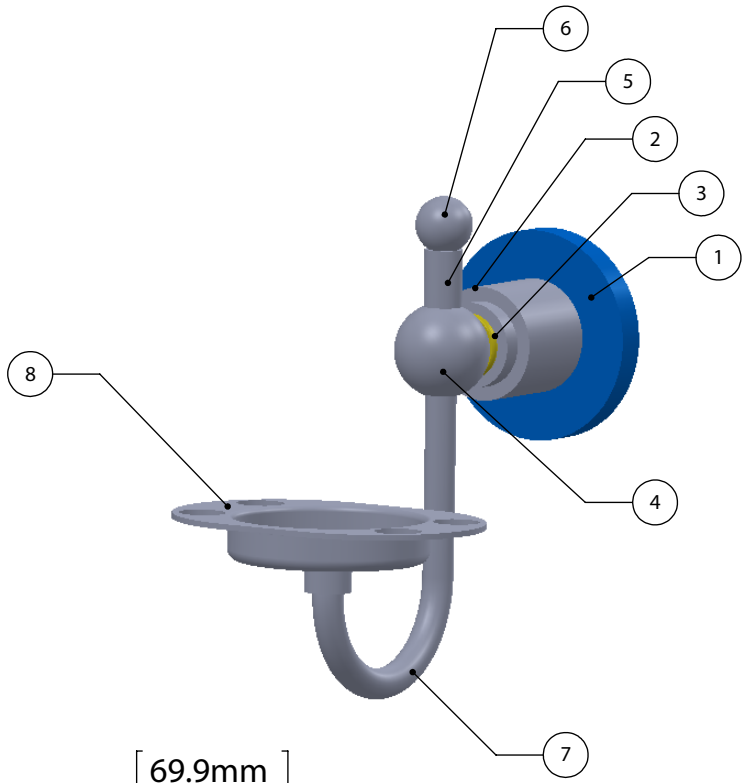

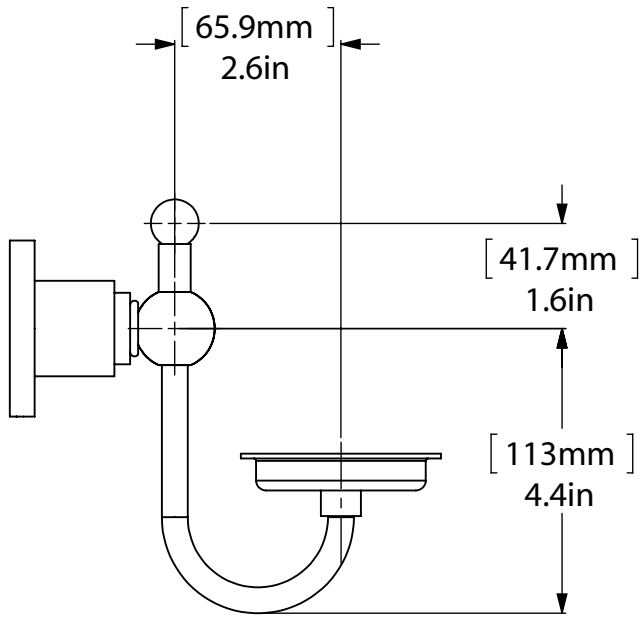

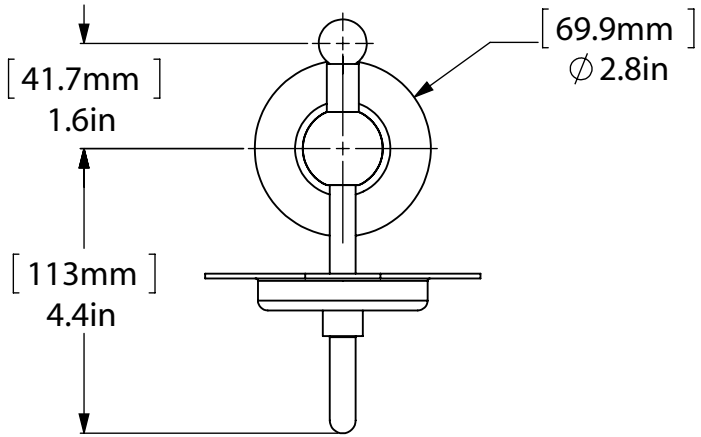

CONFIDENTIALITY/LIMITED LIABILITY STATEMENT
This document (and any files attached to it) is confidential and intended only for the person or entity to which it is delivered. If you are not the intended recipient, then you have received this document by mistake and any use, dissemination, forwarding, printing or copying of this document and its file attachments is prohibited. Please notify ALLIED BRASS INC. immediately either by telephone or by email, delete the misdirected document from your system and destroy any copies you have made of it. We do not accept any liability for any loss or damage which may arise from your receipt of this document.

UNLESS OTHERWISE STATED												
DO NOT SCALE DRAWING	X.XXX	+/-0.025		INITIALS	DATE	ITEM	QTY	DRG/PART NO	CLIENT:			
CHAMFER ALL EDGES 0.5X45°	X.XX	+/-0.1	DESIGNED		IJM	MATERIAL	BRASS		WEIGHT		FINISH	TBD
DRAWING ISO	X.X	+/-0.25	DRAWN		IJM	HEAT TREAT	NA				QUANTITY	
	X	+/-0.75	CHECKED		R. ANDRIS	CUSTOMER			CUSTOMER No		---	
	ANGLES		PROJ.ENG			DESCRIPTION:					DRAWING No.	REV
	X.XX	+/-0.05°	SAFETY			AP-26					AP-26	0
	X.X	+/-0.1°	APPROVED		R. ANDRIS							
	X	+/-0.5°	FILENAME	AP-26							SCALE 1:3	SHEET: 01 A4
FIRST ANGLE PROJECTION	MACHINED FINISH	3.2										